BSE Recycling Works, LLC

5 Gigante Drive Hampstead, NH 03841 USA TEL: (603) 329-5520 FAX: (603) 329-7458
WEB: www.bserecycle.com E-MAIL: sales@bserecycle.com

Designers, Installers and Dealers of Waste Processing Products & Services

MACHINE SPECIFICATION SHEET
INTERNATIONAL BALER MODEL LD-54-SD

MACHINE DIMENSIONS

Length	160”
Width	79”
Height	80”
Feed Opening	27" W x 51" L
Shipping Weight	10,000 Lbs. (Approximate)

BALE SIZE (Approximate)

Length	45"
Width	54"
Height	27”

STRUCTURAL

Welded Frame of Heavily Re-enforced Channel and Plate
Header Board Insert Slot
Adjustable Platen Hold Down
Platen Assembly Moves on Low Friction, Long Wearing, Replaceable Bearing Strips
Platen Guide Bars Full Length of Travel
Safety Hopper to Protect Personnel
Clam-Shell Door Design
Sand Blasted, Primed and Painted with Industrial Enamel

HYDRAULIC

Manifold Hydraulic System	
JIC Standard Hydraulics	Rated to 3,000 PSI
Reservoir Clean-Out Ports	
Main Cylinder	Bore 6", Stroke 50", Rod 4"
Door Cylinder	Bore 4", Stroke 8", Rod 1 ¾"
System Pressure	2,900 PSI
Total Force	81,995 Lbs.
Platen Pressure	56 PSI
Cycle Time (No Load)	19 Seconds
Reservoir Oil Capacity	120 Gallons

ELECTRICAL

Auto Start Sonic Beam Operated Sensor
Completed Bale Alarm
Power on Beacon (Amber)

Main Motor	30 HP/575 Volt
Main Enclosure	NEMA 12 Rated
Operators Controls	Programmable Controller
Control Circuit	120 volts
Control Switches	Limit switches
Wiring	Identified at both ends with oil-resistant markings; protected by rigid and flexible conduit

PERFORMANCE

Bale Size Expanded	54" Wide x 27" High x 45” L
Bale Volume	38 Cubic Feet Expanded (Approximate)
Cycle Time	19 Seconds
Capacity	4,237 Cubic Feet Per Hour (No Load)

* Performance rates, bale weights, and bale densities are subject to moisture content, material pre-bale densities, feed rates and other variables in baling.

International Baler Corporation

LD SERIES HORIZONTAL BALERS

Features Include:

- Heavy duty welded construction
- Heavy duty hydraulic system with TEFC motor
- Integrated disconnect providing for lock-out/tag-out procedures
- Multi-material High Density Bales, without pre-conditioning or fluffing
- Spring-loaded retractable bale retainer dogs
- Automatic cycling
- Bale weights up to 2,000 lbs
- PLC-equipped electrical panel UL Listed
- Slotted bale door and wire guides for easy bale tie-off
- Adjustable photo cell control
- Meets or exceeds all current ANSI Z 245.5 safety standards
- Safety release "hydraulicly Operated Clam-shell" door lock

Safety, reliability, and value are just three of the reasons you should choose a LD-Series horizontal baler from International Baler Corporation. The LD-Series horizontal balers feature heavy-duty channel and plate construction with advanced hydraulics and PLC controls. To get the most out of your next baler purchase, call IBC today and put one of our dependable balers to work for you.

Model Shown with Optional Conveyor

SPECIFICATIONS

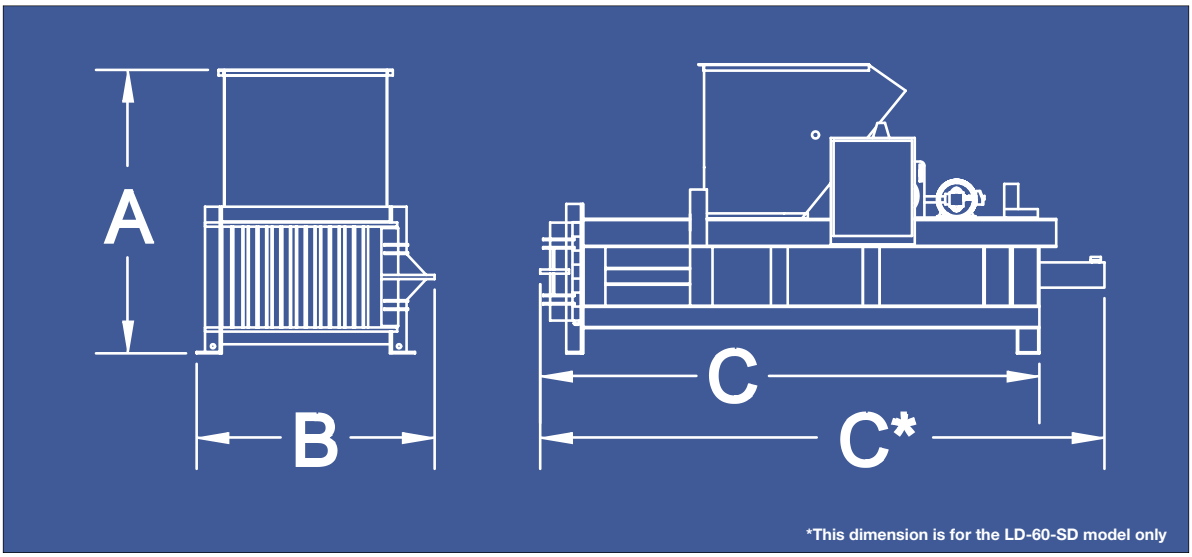

STRUCTURAL SPECIFICATIONS				
	LD-60-SD	LD-60	LD-60-HD	LD-60-XHD
OVERALL HEIGHT "A"	101 1/4	92	84	75
OVERALL WIDTH "B"	86 7/8	78	89 1/2	88
OVERALL LENGTH "C"	204 9/16	256	265 1/2	267

LD-SERIES BALER SPECIFICATIONS					
		LD-60-SD	LD-60	LD-60-HD	LD-60-XHD
BALE WEIGHTS IN LBS	OCC	UP TO 1,500	UP TO 1,500	UP TO 1,800	DESIGNED FOR NON-FERROUS METALS
	NEWS	UP TO 1,600	UP TO 1,600	UP TO 2,000	
BALE SIZE (INCHES)		60 X 30 X 48	60 X 30 X 45	60 X 30 X 48	60 X 30 X 45
MAIN MOTOR SIZE		20HP	30HP	40HP	40 HP
SYSTEM PRESSURE		3000 PSI	3000 PSI	3000 PSI	3000 PSI
MAIN CYLINDER BORE		8	8	9	9
TOTAL FORCE (LBS)		150,800	150,800	190,850	190,850
RAM FACE PRESSURE (PSI)		87	83	109	109
OIL RESERVOIR (GALLONS)		110	130	216	230
FEED OPENING (INCHES)		58 X 35	58 X 40	58 X 45	58 3/4 X 45
CYCLE TIME (NO LOAD) (Full Stroke/Short Stroke)		41/19	30/12	22/12	22/12
APPROX. SHIPPING WEIGHT (LBS)		15,500	21,500	27,000	28,000

0604-2

MEMBER ISRI

WASTEC

SMART AN INTERNATIONAL ASSOCIATION

As part or our continuing product improvement and quality assurance programs, specifications are subject to change without notice and without incurring responsibility to units previously sold.

INTERNATIONAL BALER CORPORATION

5400 Rio Grande Avenue, Jacksonville, Florida 32254
P.O. Box 6922, Jacksonville, Florida 32236
(904) 358-3812 * (800) 231-9286 * Fax (904) 358-7013

VISIT US ON THE WEB: www. intl-baler.com
Or email us at: sales@intl-baler.com